Stoddard Silencers

Specialists in Industrial Silencing

Stoddard Silencers, Inc.
1017 Progress Drive • Grayslake, Illinois 60030
Telephone (847) 223-8636 • FAX (847) 223-8638
E-Mail - info @ stoddardsilencersinc.com
Web page - www.stoddardsilencersinc.com

AIR INTAKE FILTERS AND FILTER SILENCERS

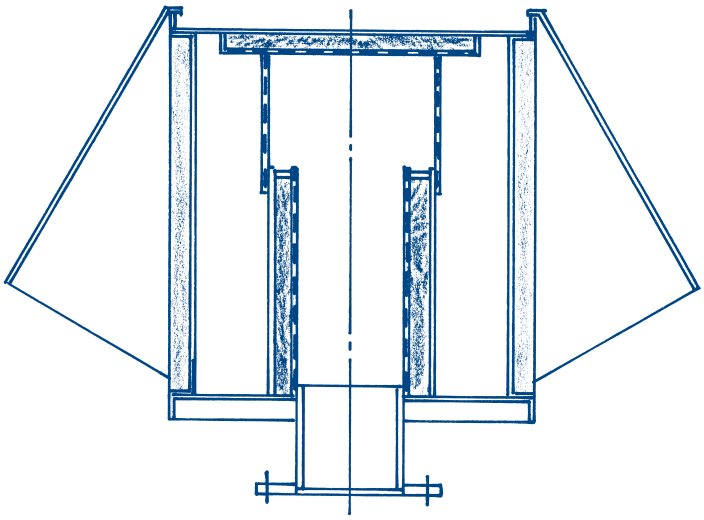

Stoddard Silencers

Air intake filter and filter silencer requirements vary with installation locations and type of foreign matter being removed from the air. Data contained in this bulletin will permit the selection of the correct size air intake filter or filter silencer to meet pressure drop requirements plus the proper selection of filter elements to achieve the desired dust-free purity of process air. All filter elements have been designed to provide long life and minimum maintenance through careful selection of dry type filter media. All filter elements have heavy metal frames to withstand rough handling and moisture.

Filter housings are fabricated from heavy gauge sheet steel and plate. To provide a weatherproof housing, it is welded and caulked as required. Housings are supplied with outlet flanges whose drilling matches 125 lb. American Standard Flanges. Internal and external surfaces are prime coated, followed with a final coat of machinery enamel.

Weatherhoods are included with all models at no extra cost. Pipe leg supports are available at an additional charge.

Models F21, F22, F41 and F42 have a Safety Inlet Screen installed to prevent any foreign objects from being drawn into the air moving device during filter changing.

F22 and F42 Filter Silencers will provide adequate silencing for centrifugal compressors. For equipment requiring better silencing, it is recommended that the F11, F21, or F41 be used in series with a standard intake silencer.

Sales engineers are available to assist you in the selection of the correct size and type of filter element or to custom design equipment to meet your special requirements.

Method for Determining Pressure Drop for All Models

Step 1 — Select filter or filter silencer model and size. _____

Step 2 — Select type of filter elements required. _____

Step 3 — Determine pressure drop for filter model size (housing only) from Figure 1. _____"H_2O

Step 4 — Calculate the CFM per filter by dividing the actual CFM required by the number of filter elements.

$$\frac{\text{ACFM}}{\text{No. of Elements}} = \frac{(\_\_\_\_\_)}{(\_\_\_\_\_)} = \_\_\_\_\_ \text{ ACFM per filter element.}$$

Step 5 — Determine the pressure drop of the filter elements from Figure 2.

Primary Filter Element Type ( ) @ _____ "H_2O
Intermediate Filter Element Type ( ) @ _____ "H_2O
Final Filter Element Type ( ) @ _____ "H_2O

Step 6 — Add the pressure drop of the filter housing (Step 3) to the pressure drop of the filter elements selected. (Step 5)

Filter Housing Model ( ) = _____ "H_2O
Primary Filter Element Type ( ) = + _____ "H_2O
Secondary Filter Element Type ( ) = + _____ "H_2O
Final Filter Element Type ( ) = + _____ "H_2O
Total Pressure Drop = _____ "H_2O

Figure 1. PRESSURE DROP FOR FILTER HOUSINGS LESS FILTER ELEMENTS

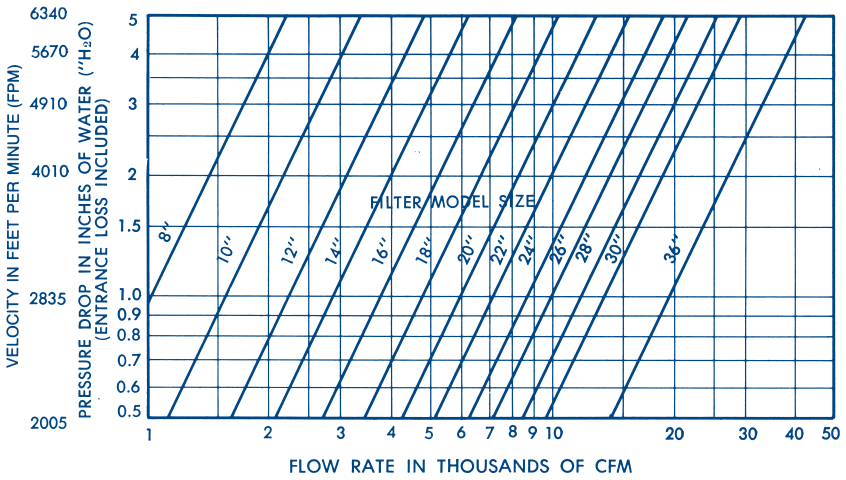

Figure 2. PRESSURE DROP FOR FILTER ELEMENTS

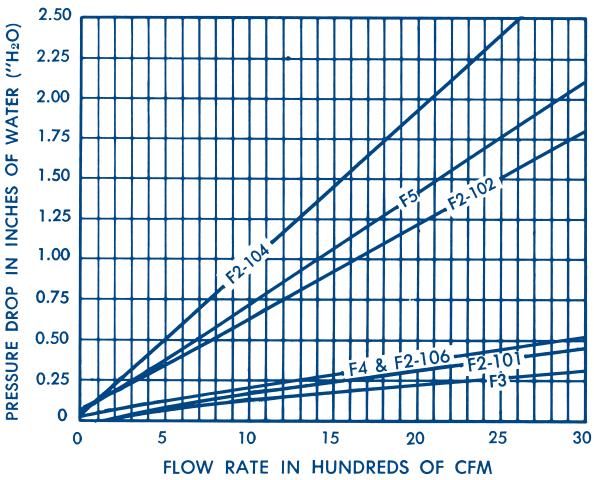

Filter Specifications

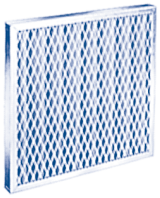

F2 WT. 10 LBS. Available with Models F11, F21 and F22.

F2-101 Filter Element Ratings (CFM/Panel)	Clean Filter Pressure Drop ("H_2O)
1500	0.20
1250	0.16
1000	0.12

F2-106 Filter Element Ratings (CFM/Panel)	Clean Filter Pressure Drop ("H_2O)
2500	0.40
2000	0.27
1500	0.17

The F2 filter element has a galvanized metal frame with a washable polyester media, between a screen mesh and expanded metal grid. Efficiency is 99% on 10 micron and above. Sizes are available as follows:

Element Number	Size	Flow	Model
F2-101	24″ x 24″ x 2″	1250	F11
F2-102	20″ x 25″ x 2″	1250	F11
F2-104	16″ x 20″ x 2″	1250	F11
F2-106	24″ x 24″ x 2″	2500	F21/F22

Servicing Instructions: Rap out excessive dirt and wash in warm water containing a mild detergent. Rinse thoroughly and rap out excessive water. Replace in Filter Housing.

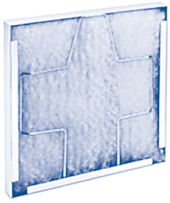

F3 WT. 4 LBS. Available with Models F11, F21, F22, F41 and F42.

F3 Filter Element Ratings (CFM/Panel)	Clean Filter Pressure Drop ("H_2O)
2500	0.25
2000	0.19
1500	0.13

The F3 is a 24″ x 24″ x 2″ filter element with a disposable polyester media, held in place with a galvanized metal holding frame, designed for easy media replacement. Media efficiency is 90% on 10 microns and above. Replacement media is Part No. A26-101.

Servicing Instructions: Replace disposable media when visually dirty.

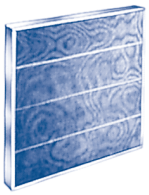

F4 WT. 11 LBS. Available with Models F21, F22, F41and F42.

F4 Filter Element Ratings (CFM/Panel)	Clean Filter Pressure Drop ("H_2O)
2500	0.35
2000	0.28
1500	0.21

The F4 is a 24″ x 24″ x 3″ filter element with a pleated paper media, held in place with a metal holding frame. Media efficiency is 99% + on 1 micron and above.

Servicing Instructions: Clean by directing compressed air through filter in opposite direction to flow. (Do **Not** Wash in Water.)

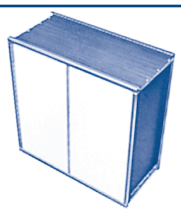

F5 WT. 40 LBS. Standard with Models F41and F42.

F5 Filter Element Ratings (CFM/Panel)	Clean Filter Pressure Drop ("H_2O)
2500	1.75
2000	1.38
1500	1.04

The F5 is a 24″ x 24″ x 11½″ filter element with a molded glass media bonded to a Galvaneal metal frame which has a fluid seal to eliminate bypass (see detail below). The efficiency is 99.97% on 0.3 micron and above by DOP test method.

Servicing Instructions: Filter is not cleanable. If the Primary and Secondary filters are properly maintained, this filter should last 18 to 24 months.

Fluid Seal System for F5 Filter

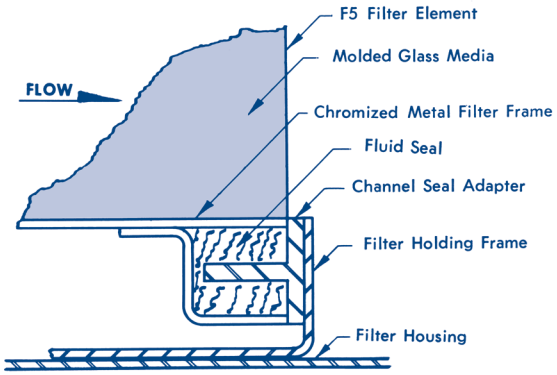

Pipe Leg Supports